ARCHITECTURA 60 XR BUILT-IN SINK RECTANGLE

PRODUCT INFORMATION

Article title	Villeroy & Boch Architectura 60 XR Built-in sink, included Waste system hand-operated, of Ceramic, 1000 x 510 mm, White Alpin CeramicPlus
Article number	336501R1
Assembly / Assembly type	surface-mounted installation
Assembly instructions	minimum unit width: 60 cm
Scope of delivery	1 x sink , 1 x basket strainer waste
Length in mm	510
Width in mm	1000
Height in mm	220
Interior depth	200
Collection	Architectura 60 XR
Material	Ceramic
Colour name	White Alpin CeramicPlus
Other material	Grate: Stainless steel Valve: Stainless steel
Position of main bowl	Basin, reversible
Function of the drain fitting	basket strainer waste
Colour designation	White Alpin
Other colour designations	Grate: Chrome, Valve: Chrome

TECHNICAL DRAWINGS

336501R1

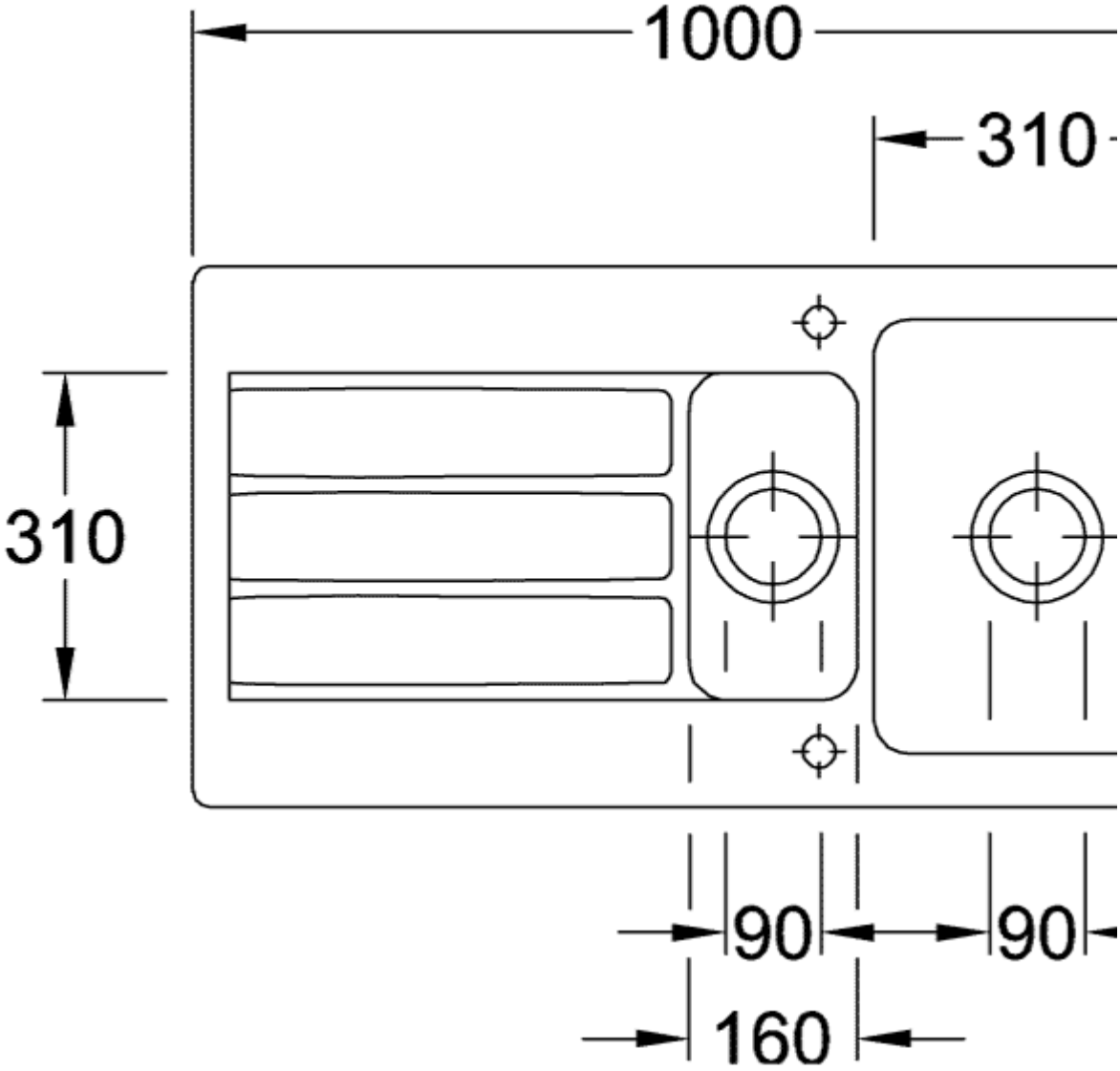
1000
310
310
90
90
160

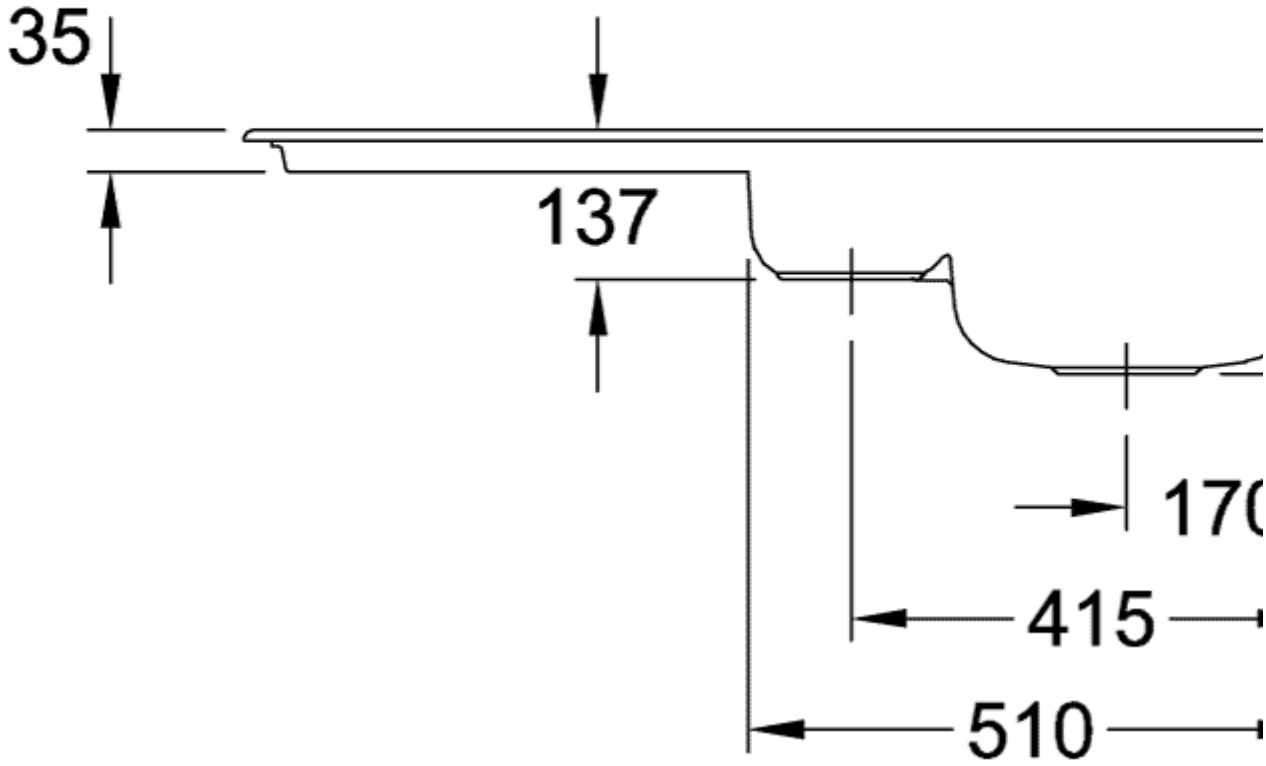
35
137
170
415
510
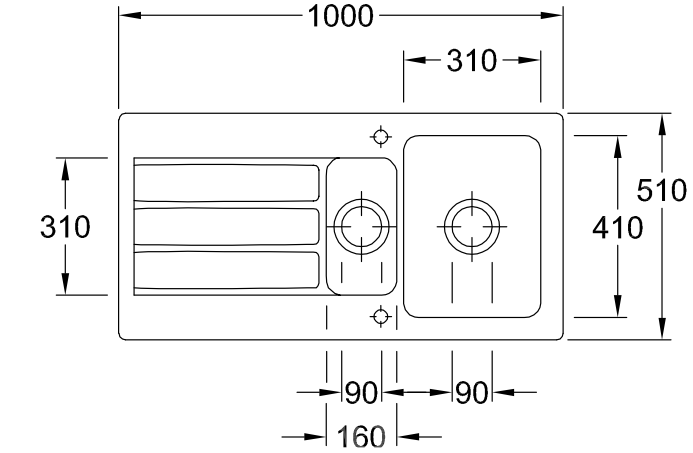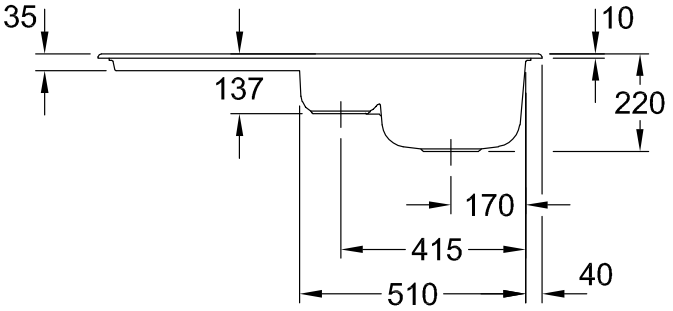
336501R1