SILUET 60 BUILT-IN SINK RECTANGLE

PRODUCT INFORMATION

Article title	Villeroy & Boch Siluet 60 Built-in sink, included Waste system pop-up, of TitanCeram, 1000 x 510 mm, White Alpin CeramicPlus
Article number	333602R1
Assembly / Assembly type	surface-mounted installation
Assembly instructions	minimum unit width: 60 cm
Scope of delivery	1 x sink , 1 x pop-up waste system 1 x cover cap, round
Length in mm	510
Width in mm	1000
Height in mm	220
Interior depth	200
Collection	Siluet 60
Material	TitanCeram
Colour name	White Alpin CeramicPlus
Other material	Grate: Stainless steel Valve: Stainless steel
Design Awards	KitchenInnovation of the Year® 2018
Position of main bowl	Basin, reversible
Function of the drain fitting	pop-up waste system
Colour designation	White Alpin
Other colour designations	Grate: Chrome, Valve: Chrome

TECHNICAL DRAWINGS

333602R1

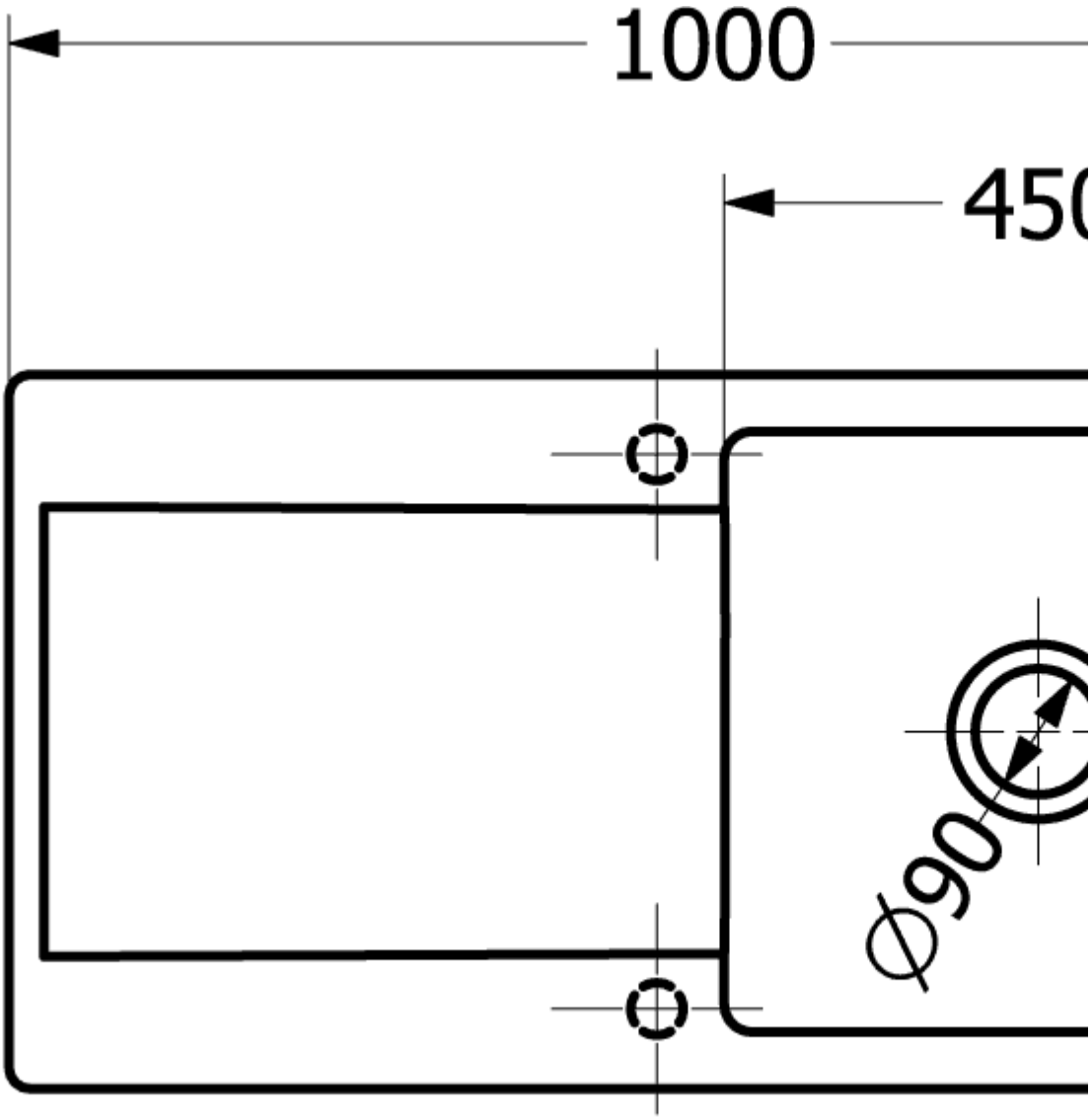
1000
450
Ø90

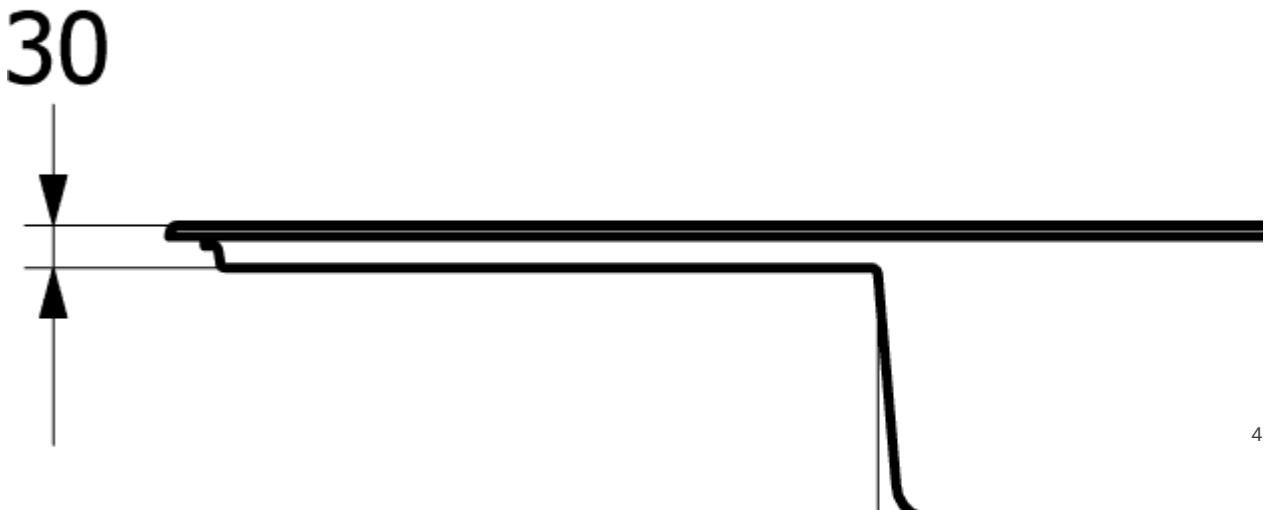
30
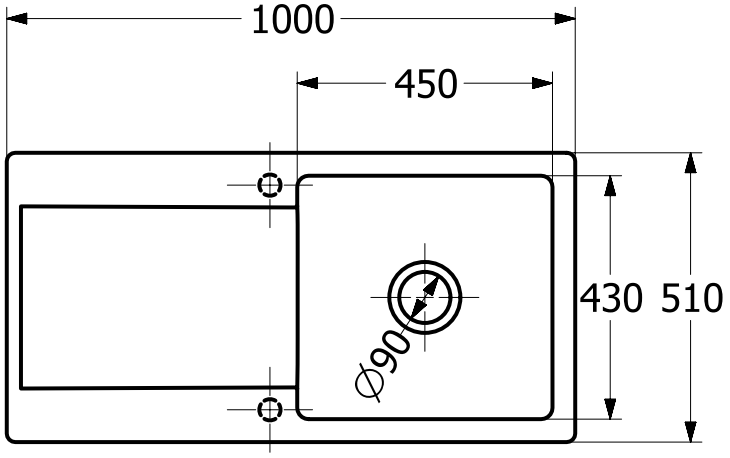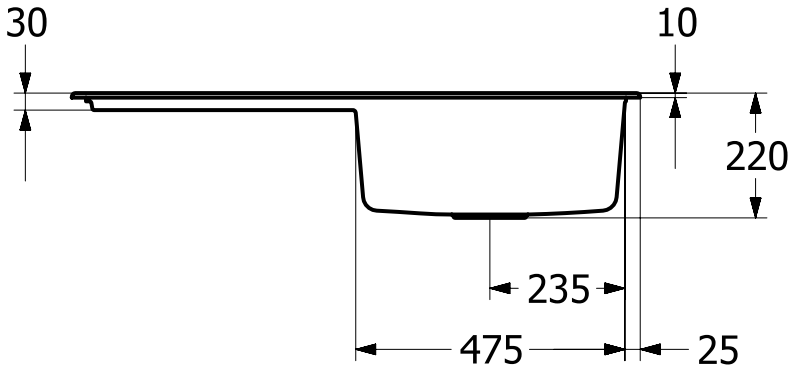
333602R1