VICARE WASHBASIN VICARE OVAL

PRODUCT INFORMATION

Article title	Villeroy & Boch ViCare Washbasin ViCare, 555 x 540 x 195 mm, White Alpin, without overflow
Article number	41195601
Assembly / Assembly type	wall-mounted
Scope of delivery	1 x washbasin
Depth in mm	540
Width in mm	555
Height in mm	195
Interior depth	100
Collection	ViCare
Tap fitting / Tap hole information	Please note: unclosable outlet valve must be used with models without overflow
Suitable for	3-hole mixer, Accessible application
Material	Sanitary ceramics
surface	glossy
Colour name	White Alpin
With overflow	No
Shape	Oval
Colour designation	White Alpin
Antibacterial surface (with AntiBac)	No
Easy surface cleaning (CeramicPlus)	No
Number of tap holes punched through	1
Number of tap holes pre-drilled	2
Number of bowls	1

TECHNICAL DRAWINGS

41195601

DE

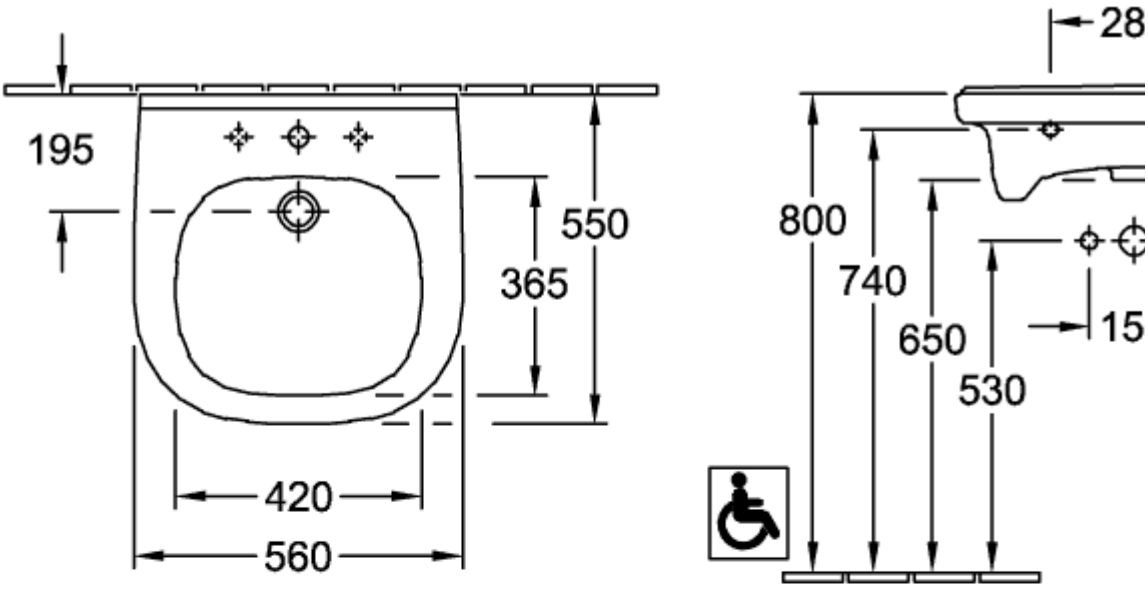

FR+

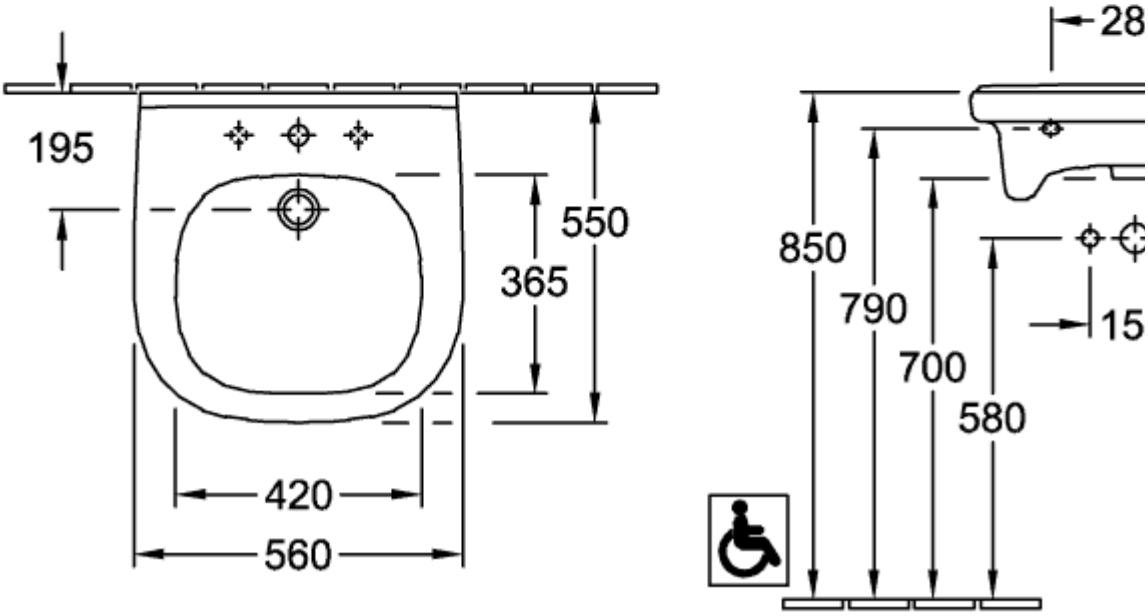

41195601

DE

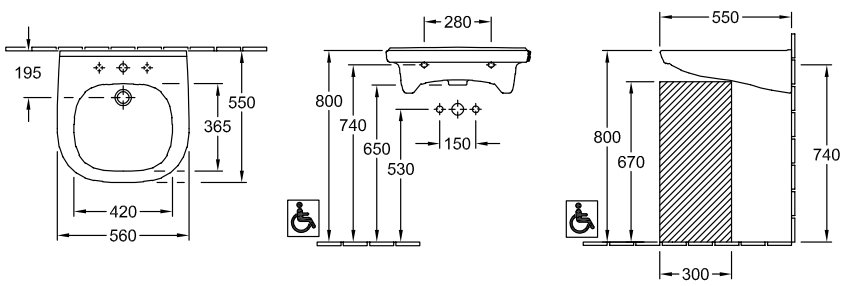

FR+

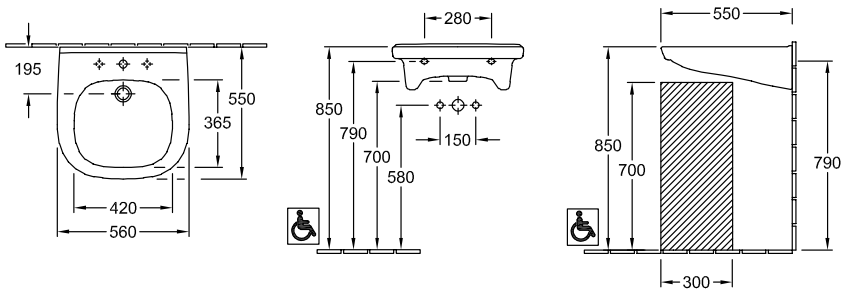

41195601

DE

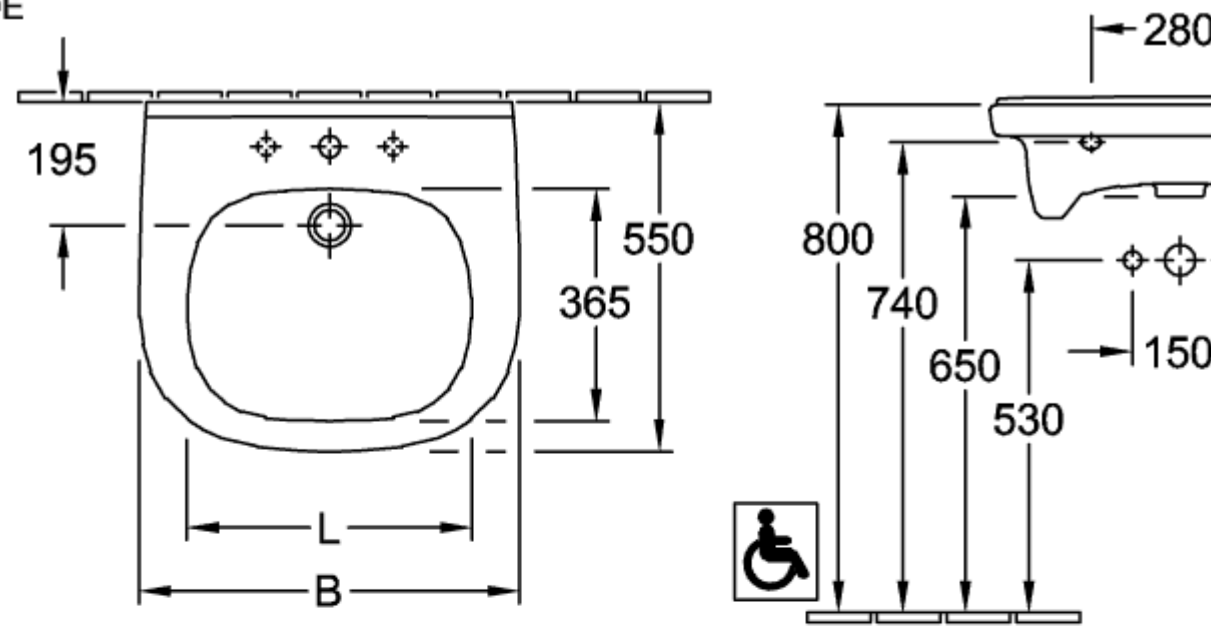

FR+

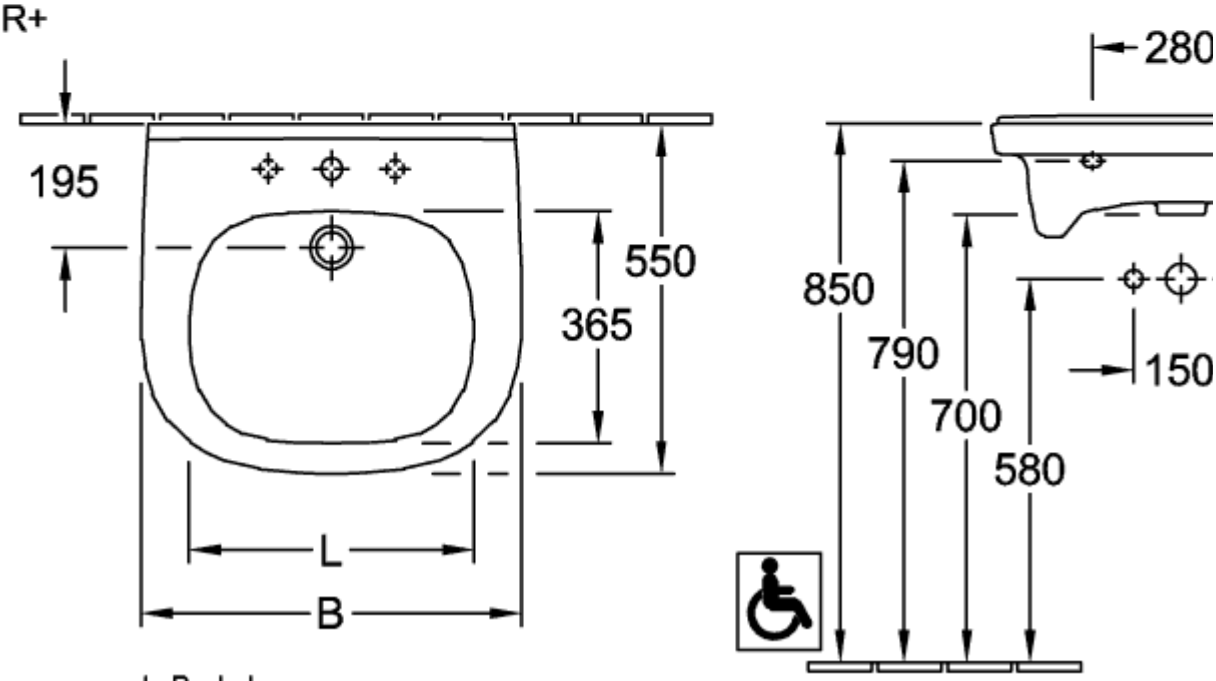

	B	L
4119 55	560	420
4119 60	610	460

41195601

DE

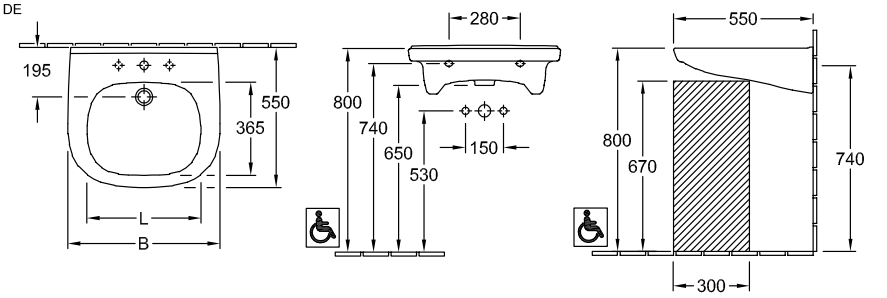

FR+

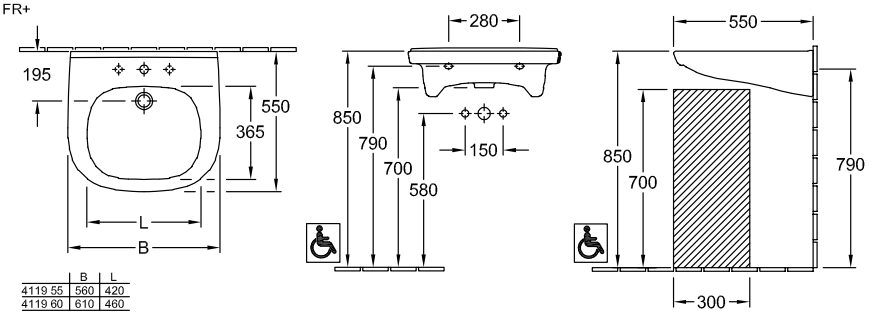

	B	L
4119 55	560	420
4119 60	610	460