MORE TO SEE MIRROR RECTANGLE

PRODUCT INFORMATION

Article title	Villeroy & Boch More To See Mirror, 900 x 750 x 20 mm
Article number	A3109000
Assembly / Assembly type	wall-mounted
Scope of delivery	1 x mirror , 1 x fastening set
Depth in mm	20
Width in mm	900
Height in mm	750
Collection	More To See
Material	Glass
Shape	Rectangle
With lighting	No
Smart home compatible	No

TECHNICAL DRAWINGS

A3109000

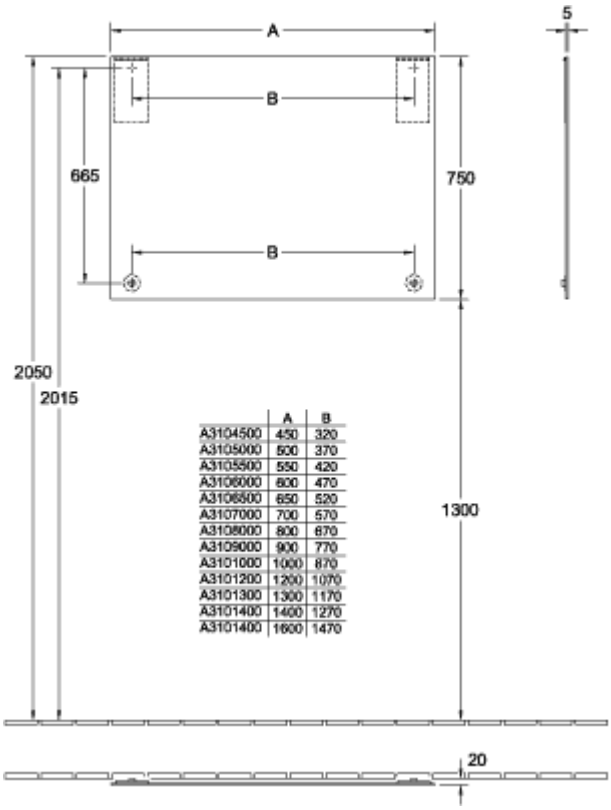

	A	B
A3104500	450	320
A3105000	500	370
A3105500	550	420
A3106000	600	470
A3106500	650	520
A3107000	700	570
A3108000	800	670
A3109000	900	770
A3101000	1000	870
A3101200	1200	1070
A3101300	1300	1170
A3101400	1400	1270
A3101400	1600	1470

A3109000

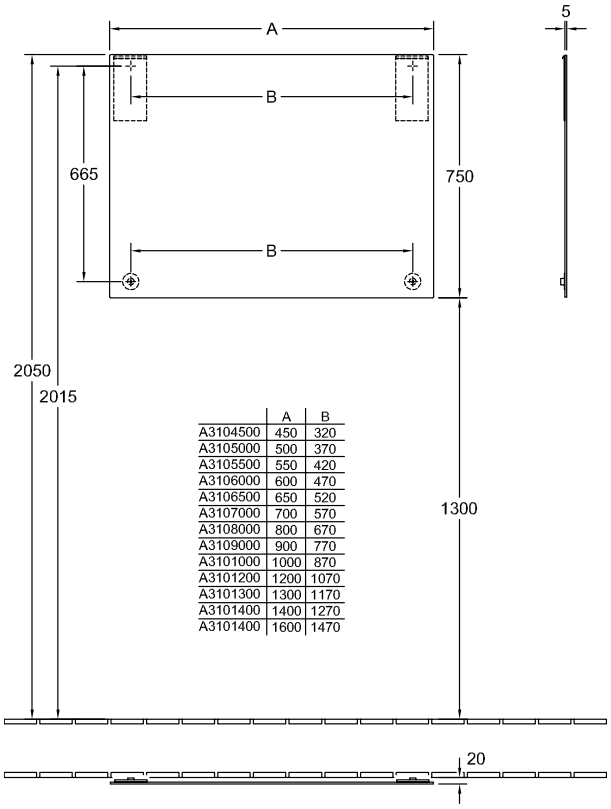

	A	B
A3104500	450	320
A3105000	500	370
A3105500	550	420
A3106000	600	470
A3106500	650	520
A3107000	700	570
A3108000	800	670
A3109000	900	770
A3101000	1000	870
A3101200	1200	1070
A3101300	1300	1170
A3101400	1400	1270
A3101400	1600	1470