HOMMAGE MIRROR RECTANGLE

PRODUCT INFORMATION

Article title	Villeroy & Boch Hommage Mirror, 985 x 740 x 37 mm
Article number	85650200
Assembly / Assembly type	wall-mounted
Scope of delivery	1 x mirror , 1 x fastening set
Depth in mm	37
Width in mm	985
Height in mm	740
Collection	Hommage
Material front	Glass
Surface of front	Mirror glass
Material body	Solid wood
Shape	Rectangle
With lighting	No
Smart home compatible	No

TECHNICAL DRAWINGS

85650200

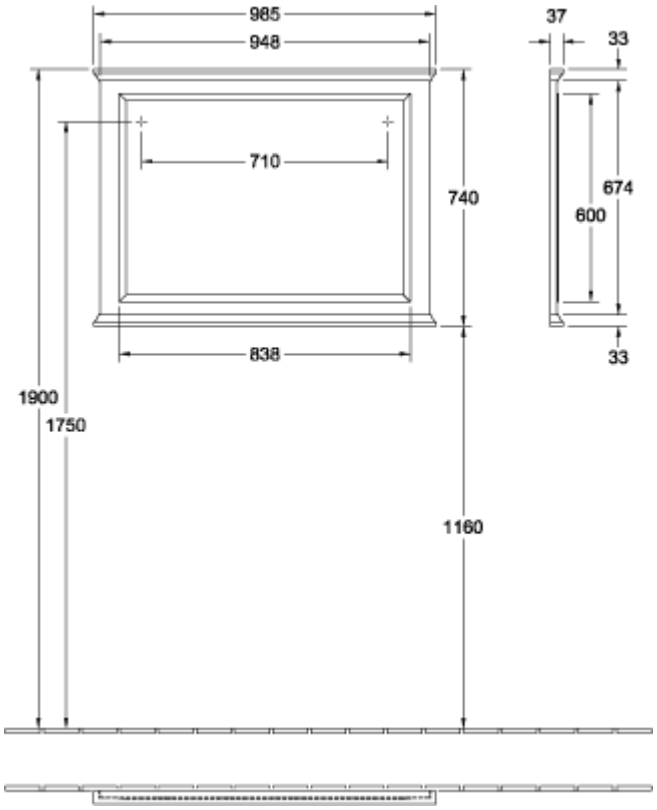
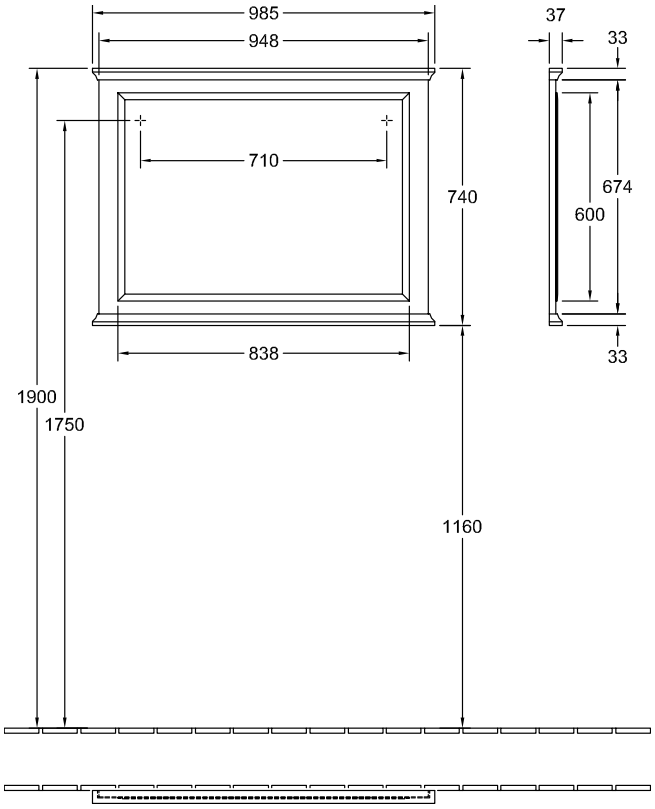
85650200