O.NOVO BUILT-IN WASHBASIN OVAL

PRODUCT INFORMATION

Article title	Villeroy & Boch O.novo Built-in washbasin, 560 x 405 x 200 mm, White Alpin, without overflow, unground
Article number	41615701
Assembly / Assembly type	built-in installation
Scope of delivery	1 x built-in washbasin , 1 x cut-out template
Depth in mm	405
Width in mm	560
Height in mm	200
Interior depth	150
Collection	O.novo
Suitable for	3-hole mixer
Material	Sanitary ceramics
surface	glossy
Colour name	White Alpin
With overflow	No
Shape	Oval
Colour designation	White Alpin
Antibacterial surface (with AntiBac)	No
Easy surface cleaning (CeramicPlus)	No
Number of tap holes punched through	1
Number of tap holes pre-drilled	2
Underside of washbasin	unground
Number of bowls	1

TECHNICAL DRAWINGS

41615701

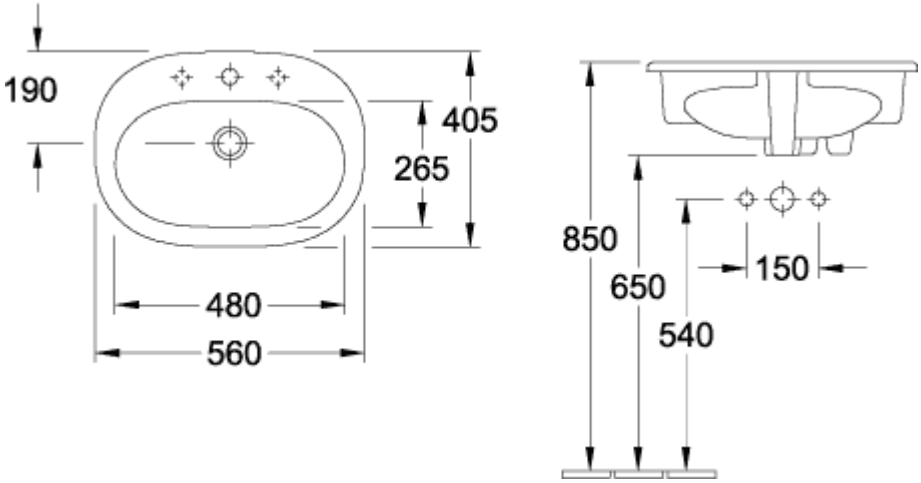
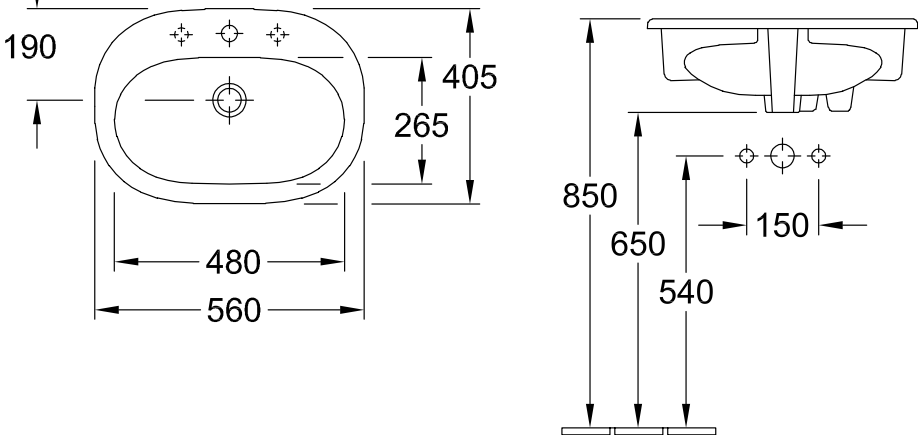
41615701